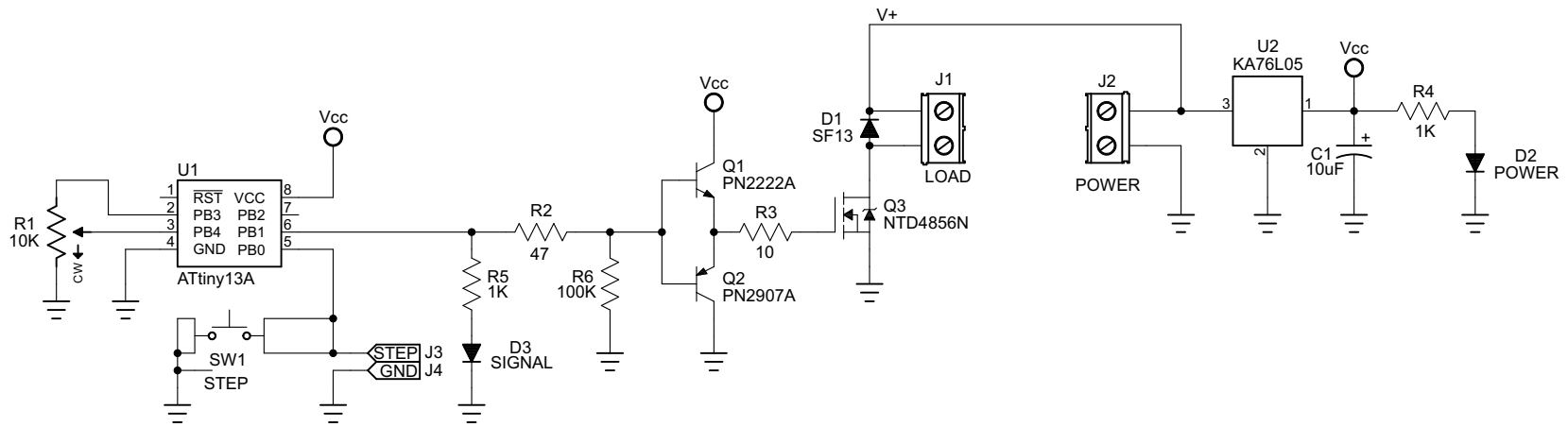

12V Dimmer Kit v2
Dale Wheat - 2 April 2010
http://dalewheat.com